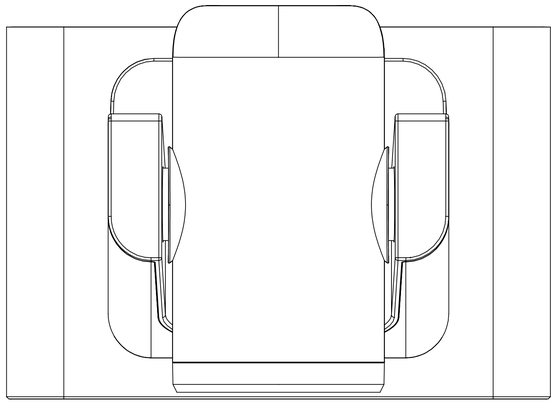

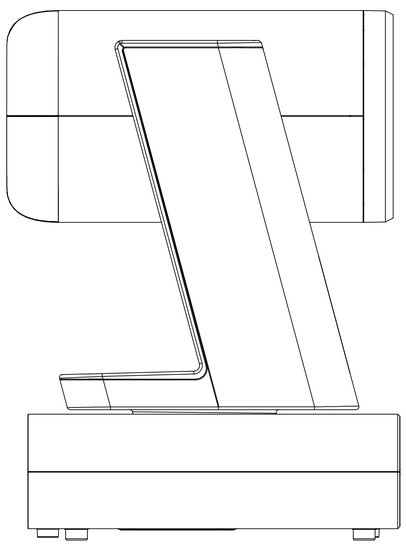

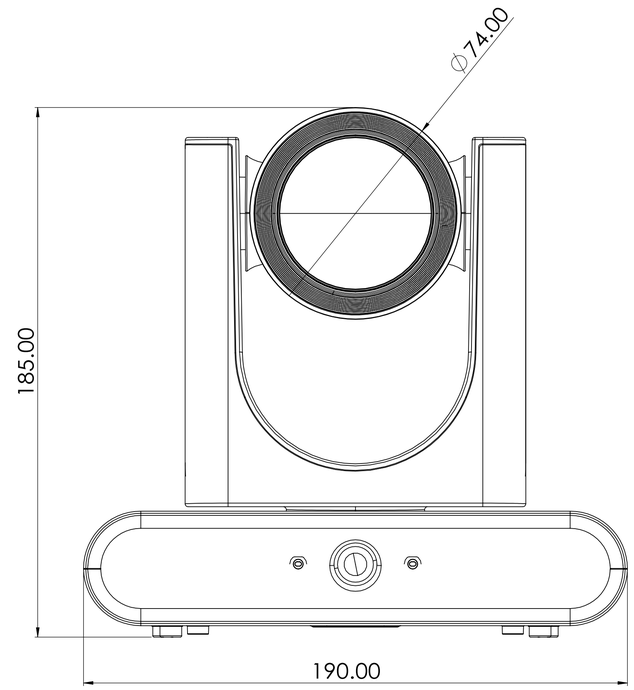
∅74.00
185.00
190.00

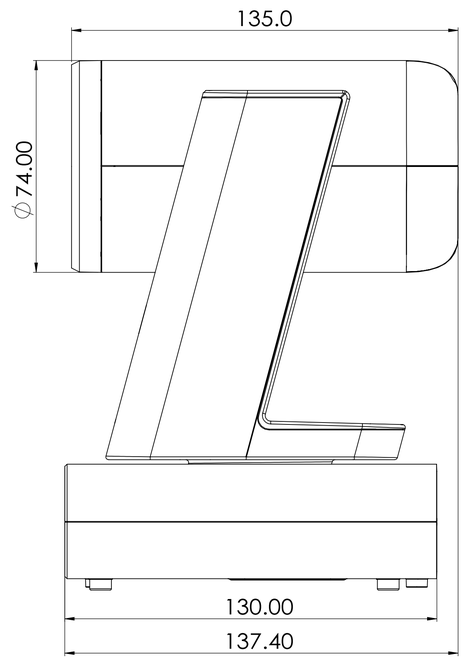
135.0
∅74.00
130.00
137.40

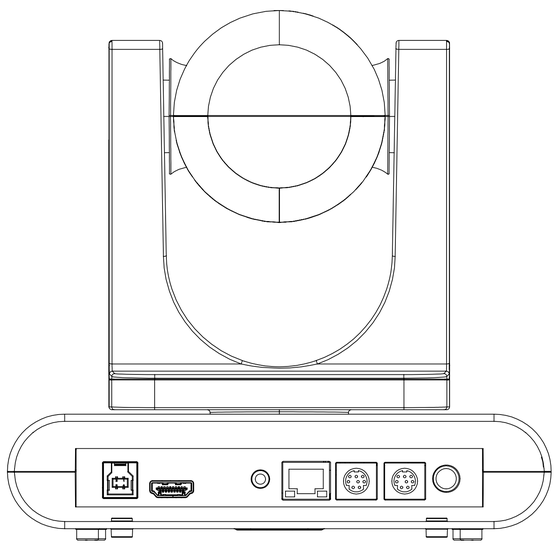

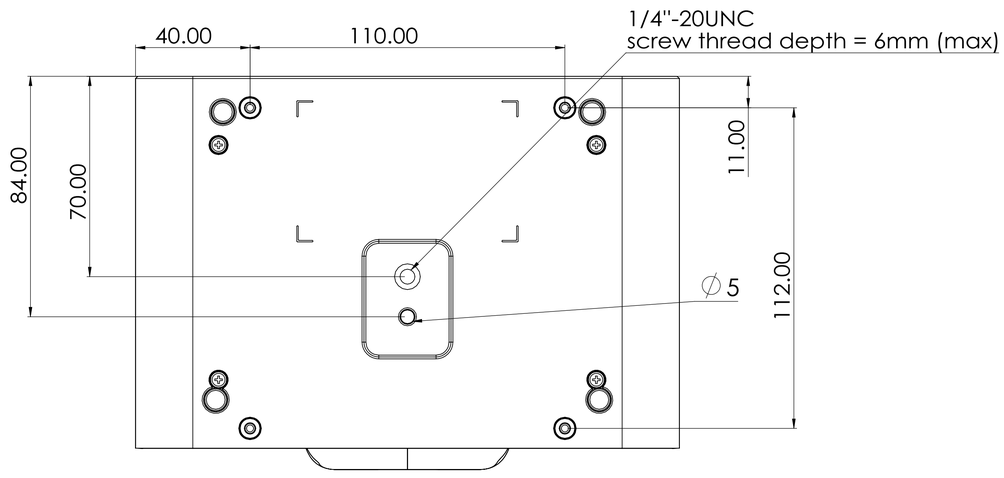
40.00
110.00
1/4"-20UNC
screw thread depth = 6mm (max)
84.00
70.00
11.00
112.00
∅5